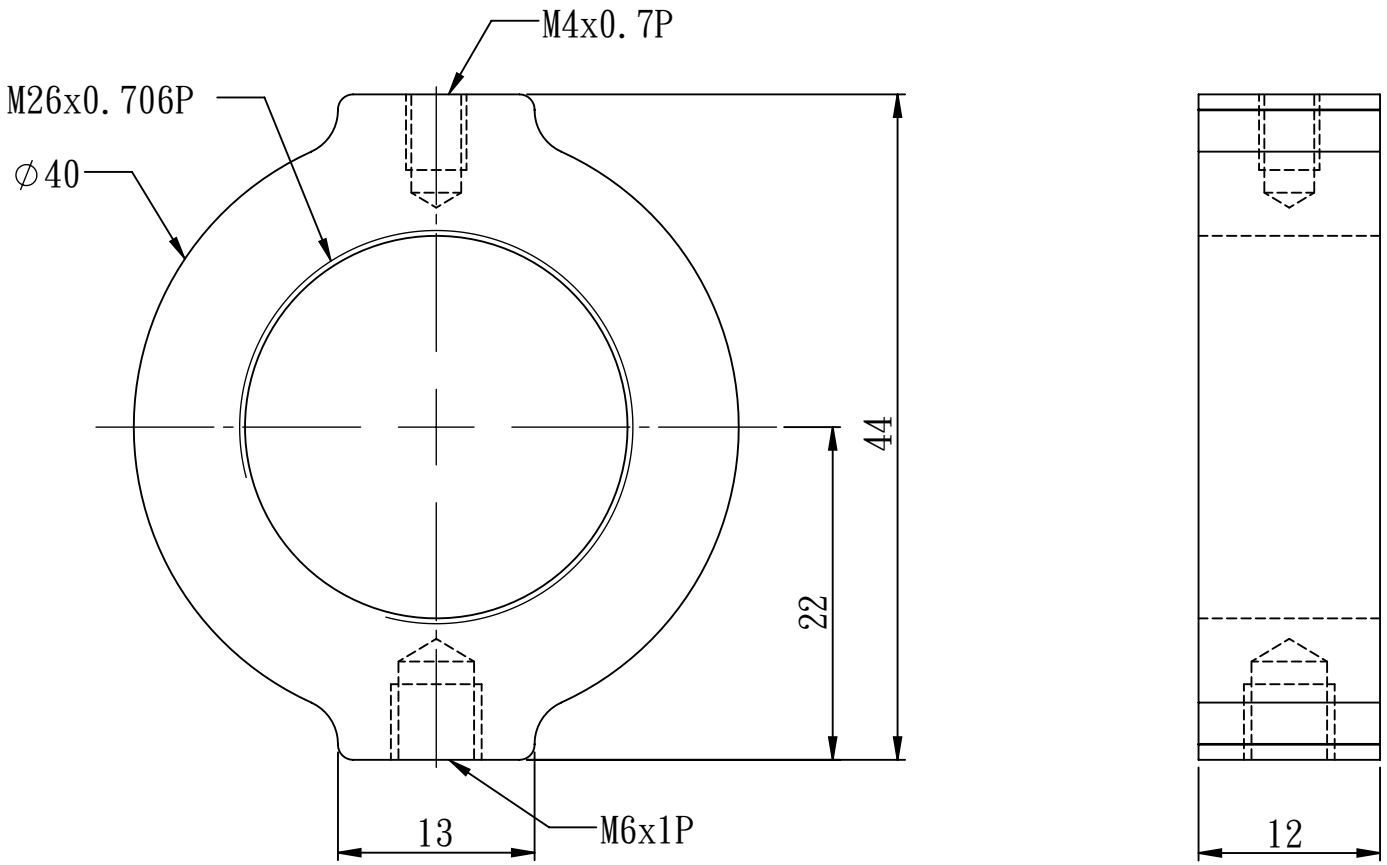

M-LNR-MI